APPROVAL SHEET

FOR

PIEZO BUZZER

深 圳 市 銳 創 達 電 子 有 限 公 司

TAT ELECTRONICS CO., LTD.

CUSTOMER:

MODEL NUMBER: EM9767P-38dB

OUR PART NO.:

CUSTOMER PART NO.:

CUSTOMER	APPROVED	CHECKED

Add: 4F/C, JING HE YUAN INDUSTRIAL PARK, BAN XUE GANG ROAD,
BANTIAN VILLAGE, SHENZHEN CITY, GUANGDONG CHINA
深圳市龙岗区布吉坂田坂雪岗大道景和源科技园 1 栋 4 楼
Tel:+86-755-8950 9282, 8950 9880;
Fax:+86-755-6135 1661
Email: tatspeaker@tatelec.com;

The information contained in this document is proprietary *TAT* and shall not be reproduced or used in part or whole without *TAT* tten consent

銳創達電子有限公司
TAT ELECTRONICS CO., LTD.
4F/C, JING HE YUAN INDUSTRIAL PARK, BAN XUE GANG ROAD,
BANTIAN VILLAGE, SHENZHEN CITY, GUANGDONG CHINA
Tel:+86-755-8950 9282, 8950 9880;
Fax:+86-755-6135 1661
Email: tatspeaker@tatelec.com;

1、Scope

The specifications should be applied to electret condenser microphone of DG09767CD(-P)

2、Storage And Judgement Conditions

	Temperature Range(° C)	Rel. Humidity (%)	Static Pressure (kPa)
Judgement	19～21	60～70	86～106
Storage	-30～70		
Operating	-20～60		

3、Specifications

Test Conditions: Vs=4.5V, RL=2.2KΩ,Temp=20±2° C, R.H=60±5%

ITEM	Symbol	Test Conditions	Min	Standard	Max	Unit
Sensitivity	S	f=1KHz, pin=1Pa	-40	-38	-36	dB 0dB=1V/Pa
Impedance	Z	f=1KHz, pin=1Pa			2.2	KΩ
Directivity	Omni-directional					
Current Consumption	I				500	μA
Operation Voltage Range	VS		1.0	4.5	10	V
S/N Ratio	S/N(A)	f=1KHz, S.P.L=1Pa A Curve	58			dB
Decreacing Voltage Characteristic	△S	f=1KHz, S.P.L=1Pa Vs=4.5-3.0V			-3	dB
Max.Input Sound Level	MISPL	f=1KHz, Distortion≤3%			115	dB

銳創達電子有限公司
TAT ELECTRONICS CO., LTD.
4F/C, JING HE YUAN INDUSTRIAL PARK, BAN XUE GANG ROAD,
BANTIAN VILLAGE, SHENZHEN CITY, GUANGDONG CHINA
Tel:+86-755-8950 9282, 8950 9880;
Fax:+86-755-6135 1661
Email: tatspeaker@tatelec.com;

4、Frequency Response

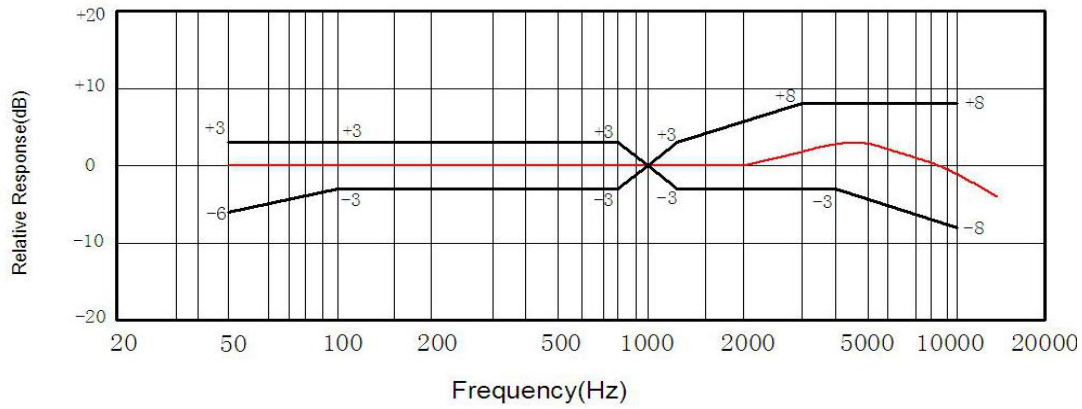

銳創達電子有限公司
TAT ELECTRONICS CO., LTD.
4F/C, JING HE YUAN INDUSTRIAL PARK, BAN XUE GANG ROAD,
BANTIAN VILLAGE, SHENZHEN CITY, GUANGDONG CHINA
Tel:+86-755-8950 9282, 8950 9880;
Fax:+86-755-6135 1661
Email: tatspeaker@tatelec.com;

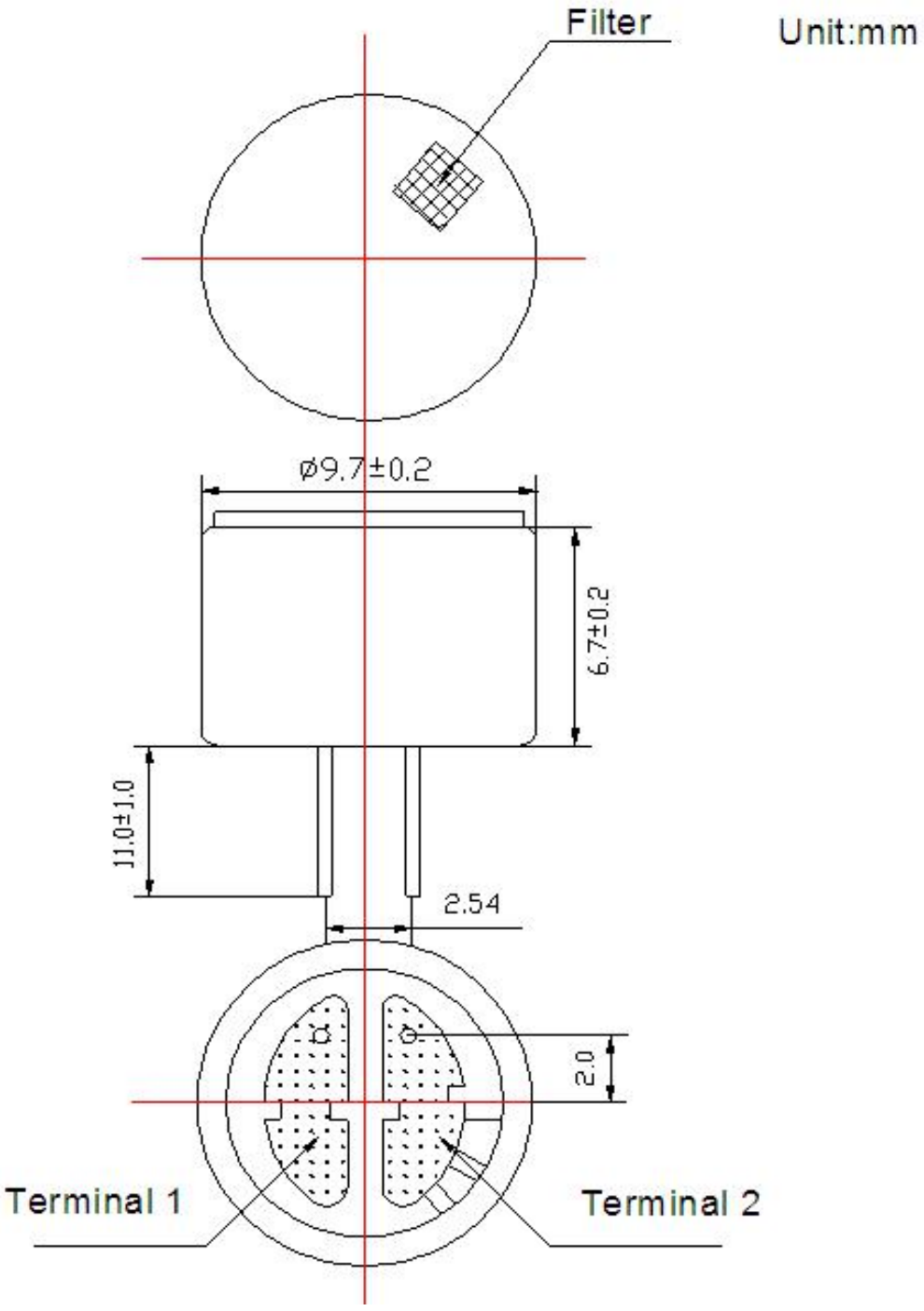

銳創達電子有限公司
TAT ELECTRONICS CO., LTD.
4F/C, JING HE YUAN INDUSTRIAL PARK, BAN XUE GANG ROAD,
BANTIAN VILLAGE, SHENZHEN CITY, GUANGDONG CHINA
Tel:+86-755-8950 9282, 8950 9880;
Fax:+86-755-6135 1661
Email: tatspeaker@tatelec.com;

6、Test Circuit

Measurement Circuit

Vs:Source Voltage 4.5V RL:Load Resistance 2.2KΩ

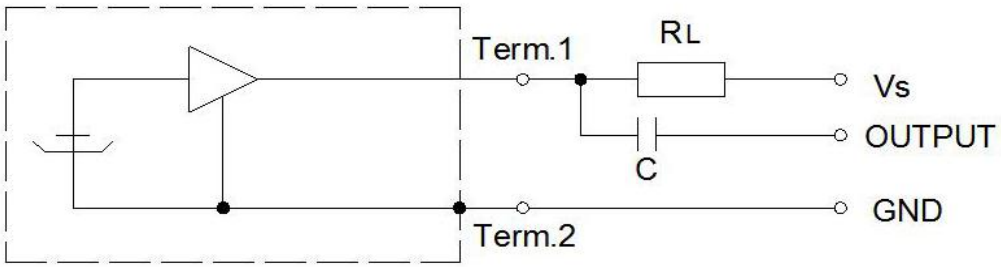

7、Test Setup Drawing

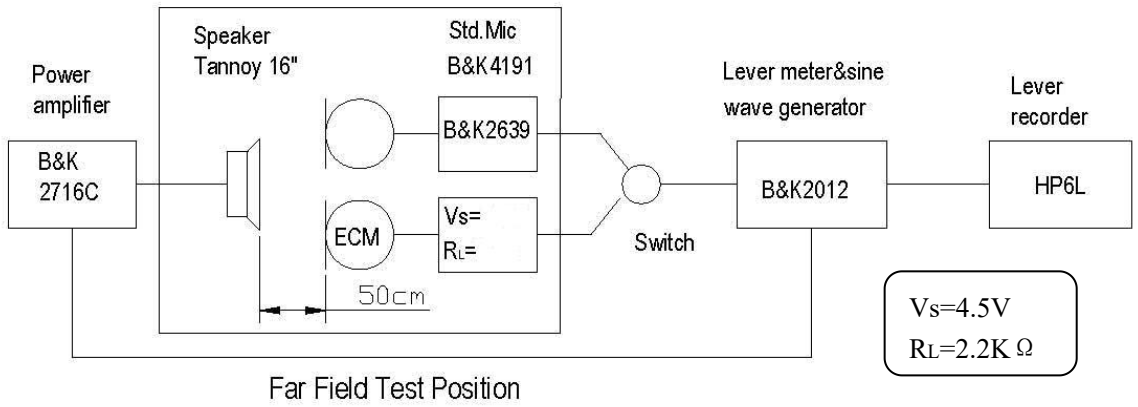

Far Field Test Position

4F/C, JING HE YUAN INDUSTRIAL PARK, BAN XUE GANG ROAD,
BANTIAN VILLAGE, SHENZHEN CITY, GUANGDONG CHINA
Tel:+86-755-8950 9282, 8950 9880;
Fax:+86-755-6135 1661
Email: tatspeaker@tatelec.com;

8.5 Vibration Test

Amplitude :	1.52mm
Duration:	1minutes /plane
Freq.range:	10～55 Hz
Total time:	2 hours

8.6 Dropping Test

Drop a unit unpacked onto a board of 20mm thick.

Height:	1.0 m
Cycle:	6

8.7 ESD Test

The microphone under test must be discharged between each ESD exposure without ground.
(contact:±6KV, air:±8KV)There is no interference in operation after 10 times exposure.

9、 Regarding the Soldering operation

a. Use 15~ 20W soldering iron and maintain 290℃~310℃ in operation.
b. Operators who work in the solder fixture and the soldering iron must be statically grounded under each soldering process.
C. Soldering should be accomplished within two seconds at each terminal so as not to be overheated.
d . Optimal design for heat sink pad is same as below.

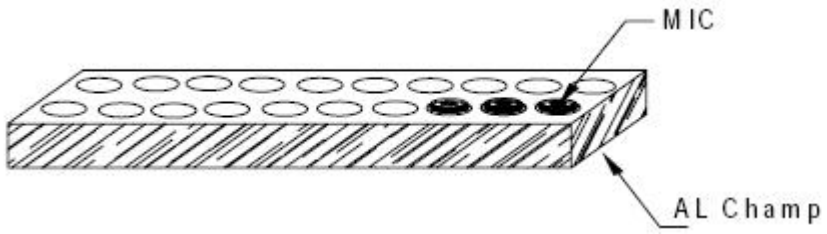

銳創達電子有限公司
TAT ELECTRONICS CO., LTD.
4F/C, JING HE YUAN INDUSTRIAL PARK, BAN XUE GANG ROAD,
BANTIAN VILLAGE, SHENZHEN CITY, GUANGDONG CHINA
Tel:+86-755-8950 9282, 8950 9880;
Fax:+86-755-6135 1661
Email: tatspeaker@tatelec.com;

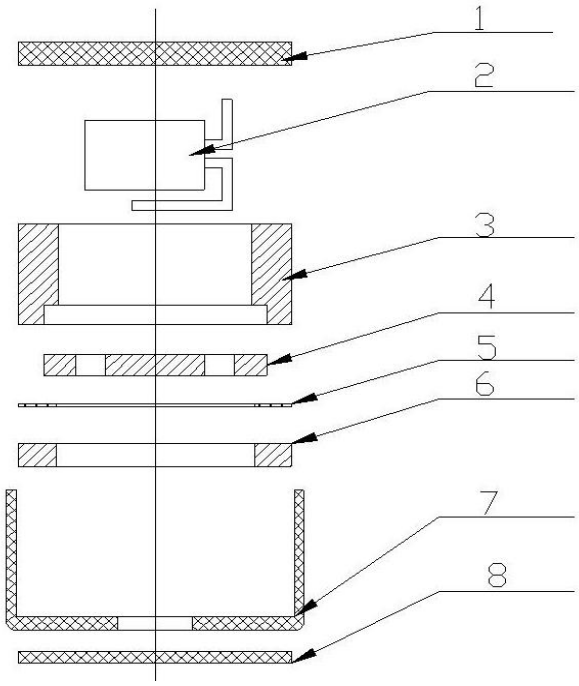

NO.	PARTS
1	PCB
2	FET
3	Holder
4	Back plate
5	Spacer
6	Film
7	Outer most shell
8	Cloth

NO.	Part name	Material Type	Qty	Origin	Manufacture	Remarks
1	PCB	FR-1	1			
2	FET	CSK596	1			
3	Holder	ABS	1			
4	Back plate	Cu	1			
5	Spacer	Mylar	1			
6	Film	FEP	1			
7	Outer most shell	AL	1			
8	Cloth	Fabrics	1			

4F/C, JING HE YUAN INDUSTRIAL PARK, BAN XUE GANG ROAD,
BANTIAN VILLAGE, SHENZHEN CITY, GUANGDONG CHINA
Tel:+86-755-8950 9282, 8950 9880;
Fax:+86-755-6135 1661
Email: tatspeaker@tatelec.com;

11、 HANDLING INSTRUCTION

1、Assembly process

a)、After connector and holder are once disassembled , they should not be re-used.

b)、Do not touch outer springs directly(except for PCB or proper terminal set at nominal height.

c)、Do not give any mechanical shocks to the micphone(e.g. dropping to floor)

2、General information

2-1: This microphone shall not be operated or stored in following environment.

>where liquid(water,solvent and so on)splashes.

>where the air has a high concentration of corrosive gas .

>where is too dusty.

>where temperature changes rapidly.

2-2: Frequency response especially in high frequency region is dependent on the structure of enclosure.

Please remove additional acoustic mass or cavity in front of the microphone to the utmost.

2-3:do not put mechanical pressure more than 2 kg to the microphone.

2-4: microphone should not be in state of outgoing packing for a long-term storage.

2-5: all the soldering procedures upon microphone must be complete in a metallic device,the temperature of the soldering irons must be limited as 320℃ and less 3 s ,the operators、the solder fixtures and the soldering irons must be statically grounded under each soldering process.

銳創達電子有限公司
TAT ELECTRONICS CO., LTD.
4F/C, JING HE YUAN INDUSTRIAL PARK, BAN XUE GANG ROAD,
BANTIAN VILLAGE, SHENZHEN CITY, GUANGDONG CHINA
Tel:+86-755-8950 9282, 8950 9880;
Fax:+86-755-6135 1661
Email: tatspeaker@tatelec.com;

1、Assembly process

a)、After connector and holder are once disassembled , they should not be re-used.

b)、Do not touch outer springs directly(except for PCB or proper terminal set at nominal height.

c)、Do not give any mechanical shocks to the micphone(e.g. dropping to floor)

2、General information

2-1: This microphone shall not be operated or stored in following environment.

>where liquid(water,solvent and so on)splashes.

>where the air has a high concentration of corrosive gas .

>where is too dusty.

>where temperature changes rapidly.

2-2: Frequency response especially in high frequency region is dependent on the structure of enclosure.

Please remove additional acoustic mass or cavity in front of the microphone to the utmost.

2-3:do not put mechanical pressure more than 2 kg to the microphone.

2-4: microphone should not be in state of outgoing packing for a long-term storage.

2-5: all the soldering procedures upon microphone must be complete in a metallic device,the temperature of the soldering irons must be limited as 320℃ and less 3 s ,the operators、the solder fixtures and the soldering irons must be statically grounded under each soldering process.