RoHS Compliance

REV	SYM	Revision Record	Appr.	Date
V0	KLS02120	New Version Release	WuHao	2025-04-01

Electrical Characteristics	UL	IEC
Rated Voltage	300V	250V
Rated Current	15A	24A
Withstand Voltage	AC2000V/1 min	4KV
Wire Range	22~14 AWG	0.5~2.5 mm^2

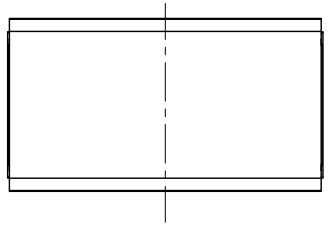

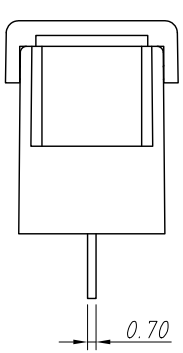

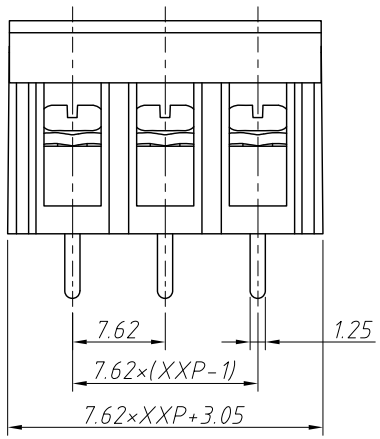

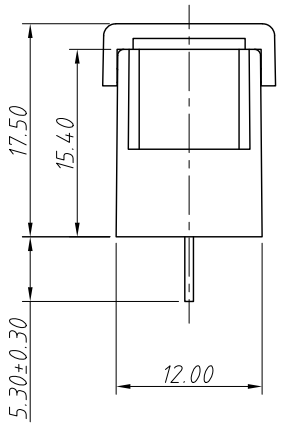

Material and other:
Housing:PA66,UL94V-0
Pin Header:Copper Alloy,Sn Plated
Torque Value:M3 , 0.5N.m
Operating Temperature:-40°C ~ +105°C

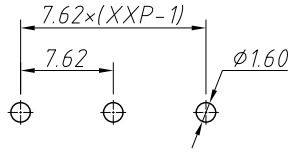

Recommanded PCB Layout
Tolerance:±0.05mm

Order Information

L-KLS2-48A-7.62-XXP-B

- RoHS
- Terminal Block
- Pitch:7.62mm
- No.:Of (02~24) Pin
- B=Without Ears

ANGLE TOLERANCE	PROJECTION		Description:	
±3°				Pitch 7.62mm Terminal Block
GENERAL TOLERANCE	UNITS	mm	KLS P/N:	L-KLS2-48A-7.62-XXP-B
0~30 ±0.50	SHEET SIZE	A4		
30~60 ±0.75	Draw:	WuHao	2025-04-01	NingBo KLS ELECTRONIC CO.,LTD.
60~90 ±1.00	Check:	Daniel	2025-04-01	