RoHS Compliance

REV	SYM	Revision Record	Appr.	Date
V0	KLS01545	New Version Release	Song	2025-07-25

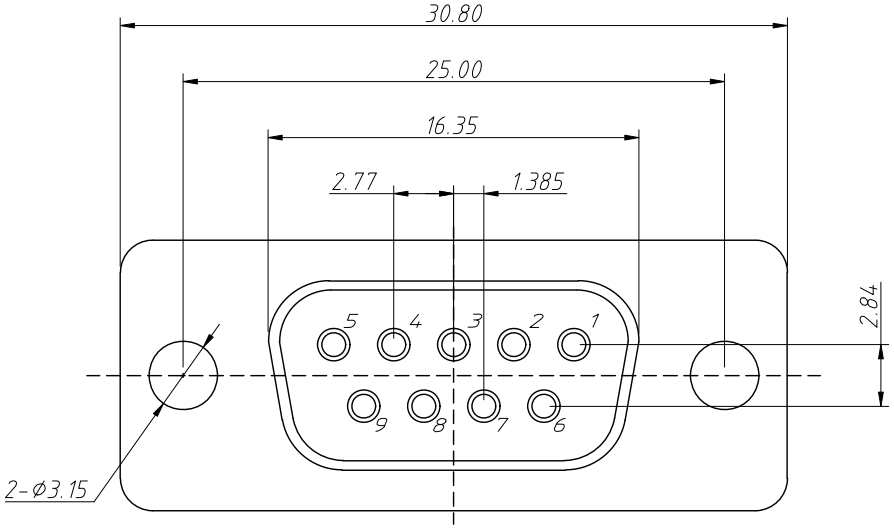

Material:
Rubber core: PBT
Terminal:Copper Alloy,GF
Shell:Ferro Alloy
Nickel plating on the front shell
Tin plating on the back shell

Electrical:
Rated Voltage:250V AC Max
Rated Current:3A Max
Contact Resistance:30mΩ Max
Insulation Resistance:3000MΩ Min At 500V DC
Withstand Voltage:250V AC RMS For 1 Minute
Operation Temperature:-45°C ~ +85°C

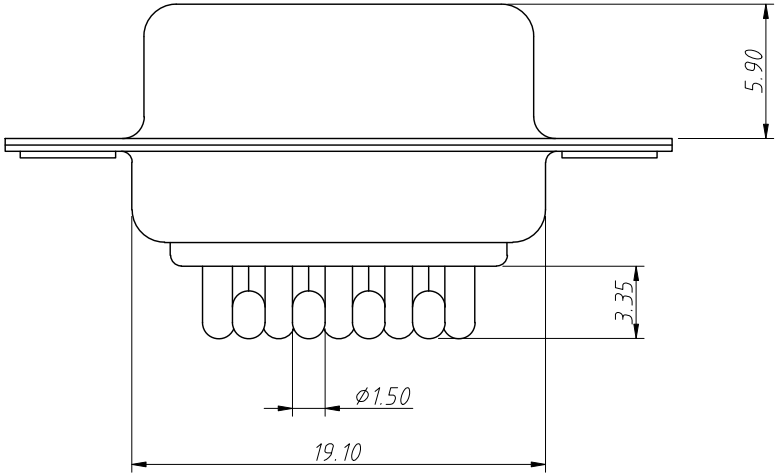

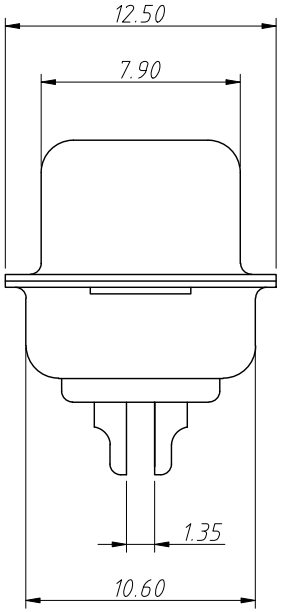

Order Information

L-KLS1-225- 09- F- B

RoHS
Series No.
No.of 09 Pins
Connector Type:
M-Male F-Female
Rubber core Color:
B-Black L-Blue W-White

ANGLE TOLERANCE	PROJECTION		Description:	D-Sub Connector
±3°				
GENERAL TOLERANCE	UNITS	mm	KLS P/N:	L-KLS1-225-09-F-X
x. ±0.5	SHEET SIZE	A4		
x.x ±0.3	Draw:	Song	2025-07-25	NingBo KLS ELECTRONIC CO.,LTD.
x.xx ±0.2	Check:	Daniel	2025-07-25	