| REV | CONTENT | CHK | DATE |
|---|---|---|---|
| V0.0 | CONTENT | ZML | 25.05.05 |

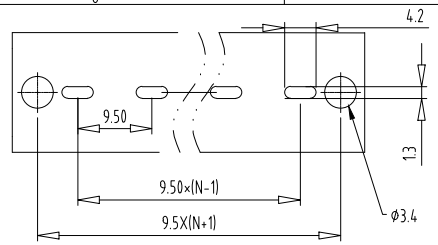

PCB LAYOUT

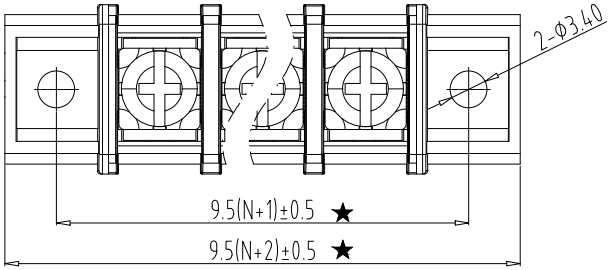


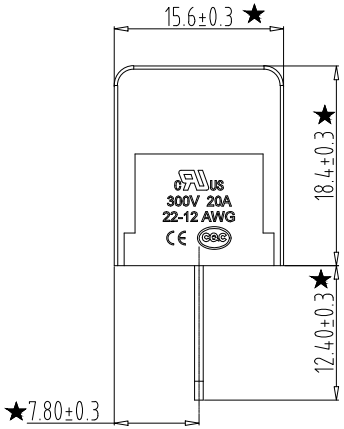


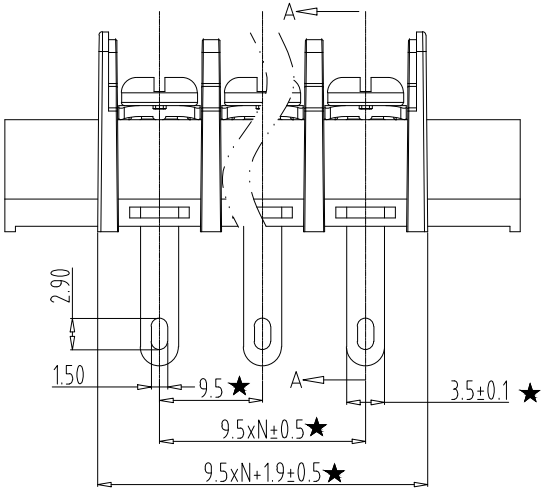


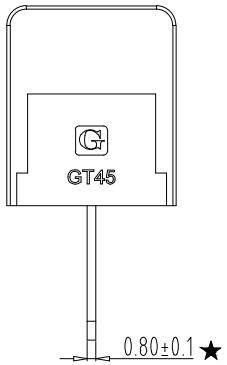


Electrical :

1.Rated Voltage : 300V

2.Rated Current : 20A

3.Torque Value : M4,10.53Lb.in

4.Wire Range :22-12AWG

5.Stripping Length : 9-10mm

6.Withstanding Voltage : AC2000V/1Min.

7.Operating Temperature : -40°C~+105°C

8.RoHS Compliance

9."★" is the key quality control point

GT45H-A - XXP - X X - 00

① ② ③ ④ ⑤

① Sereies No.

② 1 Single Pitch
2 Double Pitch

③ poles

| | |
|---|---|
| 02 | 02Contacts |
| 03 | 03Contacts |
| ... | |
| 24 | 24Contacts |

④ Color:

| | |
|---|---|
| 1 Grey | 2 Blue |
| 3 Black | 4 Green |
| 5 Orange | 6 Red |
| 7 Transparent | 8 Yellow |
| 9 White | |

⑤Customer Reques:00--Standard

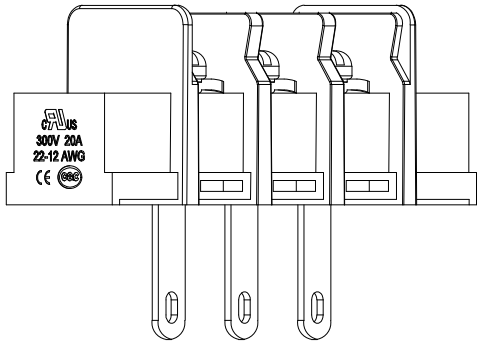


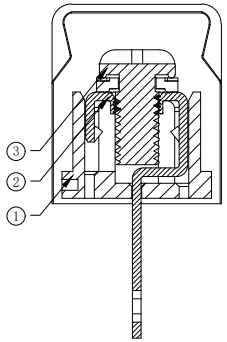

SCETION A-A

| ITEM | NAME OF PART | NO. OF PART | Q"TY | MATERIAL | NOTE |
|---|---|---|---|---|---|
| 3 | SCREW | XX | P | STEEL | Ni Plated |
| 2 | PIN HEADER | XX | P | COPPER ALLOY | Tin Plated |
| 1 | HOUSING | XX | 1 | PA66 UL94V-0 | SEE NOTE |

| | | | | | | | |
|---|---|---|---|---|---|---|---|
| DWG. | ZML | DATE | 25.05.05 | SIZE | A4 | UNITS | mm |
| CHK. | | DATE | | SCALE | 1:1 | SHEET/OF | 1 / 1 |
| APP. | | DATE | | NAME | GT45H-A-XXP-XX-00 | | |
| | | | | DWGNO. | XXXX | | |

宁波冠泰电子有限公司
NINGBO GOLTEN ELECTRONICS CO., LTD.

| Total Pitch Tolerances in mm | | | | | | | | | Nominal dimension range in mm | | | | | | | | | ⊥ | | ÷ | — | | // |
|---|---|---|---|---|---|---|---|---|---|---|---|---|---|---|---|---|---|---|---|---|---|---|---|
| over 0 to 30 | over 30 to 53 | over 53 to 70 | over 70 to 90 | over 90 to 115 | over 115 to 150 | over 150 to 250 | over 250 to 350 | over 350 to 500 | over 0 to 30 | over 30 to 53 | over 53 to 70 | over 70 to 90 | over 90 to 115 | over 115 to 150 | over 150 to 200 | over 200 to 250 | over 250 to 320 | over 0 to 10 | over 10 | all | over 0 to 100 | over 100 to 150 | over 150 |
| ±0.18 | ±0.20 | ±0.25 | ±0.3 | ±0.35 | ±0.44 | ±0.60 | ±0.70 | ±0.85 | ±0.20 | ±0.25 | ±0.30 | ±0.35 | ±0.44 | ±0.55 | ±0.70 | ±0.80 | ±0.90 | 0.2 | 0.3 | 0.3 | 0.2 | 0.3 | 0.5 |