RoHS Compliance

REV	SYM	Revision Record	Appr.	Date
V0	KLS08257	New Version Release	Jenny	2024-04-17

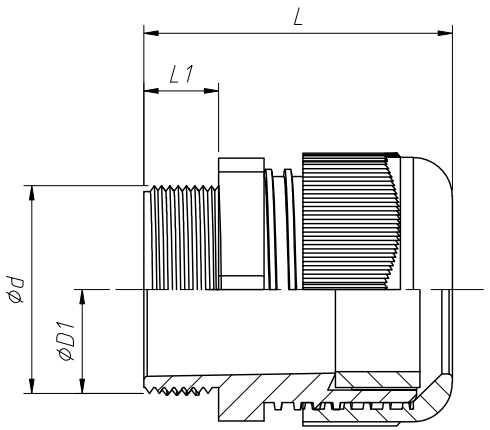

A-A

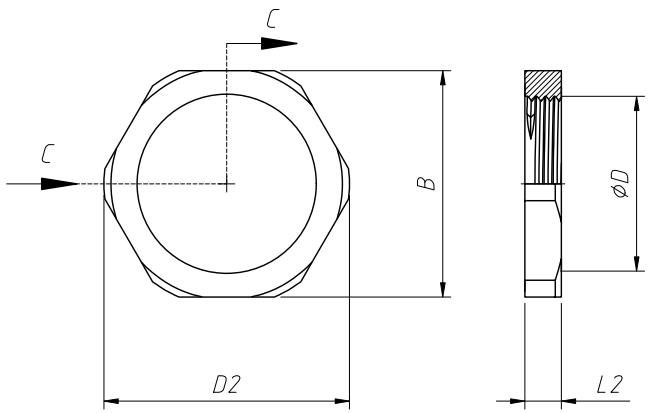

Nut

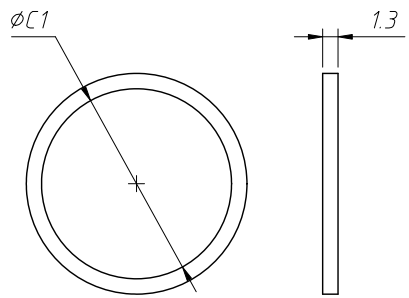

Gasket

Type	Cable Range (mm^2)	B	D ±0.35	d	ØD1 ±0.35	ØD2 ±0.35	L ±0.51	L1 ±0.35	L2 ±0.35	C1
L-KLS8-0607-PG-07	3-6.5	17.54	11.52	12.21	7.3	19.28	31.48	9.24	4.56	12.21
L-KLS8-0607-PG-09	4~8	22.03	14.19	15.04	9.65	24.05	33.81	9.77	4.55	15.04
L-KLS8-0607-PG-11	5~10	24.16	17.2	18.42	11.94	26.4	36.2	9.44	4.35	18.42
L-KLS8-0607-PG-13.5	6~11	25.71	19.26	20.15	13.64	28.76	36.65	9.95	5.36	20.15
L-KLS8-0607-PG-16	10~13	29.78	21.44	22.26	15.55	32.62	40.12	10.74	5.98	22.26
L-KLS8-0607-PG-19	12~15	30.41	22.78	23.82	15.42	33.38	43.04	11.27	5.85	23.82
L-KLS8-0607-PG-21	13~18	36.08	26.97	28.17	19.27	39.46	45.44	12.36	6.39	28.17
L-KLS8-0607-PG-25	16~21	37.17	28.7	29.7	22.42	40.92	49.36	12.78	6.95	29.7
L-KLS8-0607-PG-29	18~25	45.05	35.71	36.63	26.81	49.51	50.1	14.37	6.84	36.63
L-KLS8-0607-PG-36	22~32	59.19	46	46.85	34.12	64.72	58.36	12.91	7.6	46.85
L-KLS8-0607-PG-42	32~38	63.7	52.82	53.88	40.14	71.09	62.79	15.54	6.76	53.88
L-KLS8-0607-PG-48	37~44	69.65	58.09	59.18	45.66	76.89	64.2	15.03	6.88	59.18
L-KLS8-0607-PG-63	42~50	82.5	68.76	70.75	56.45	91.75	91.11	28	9.1	70.75

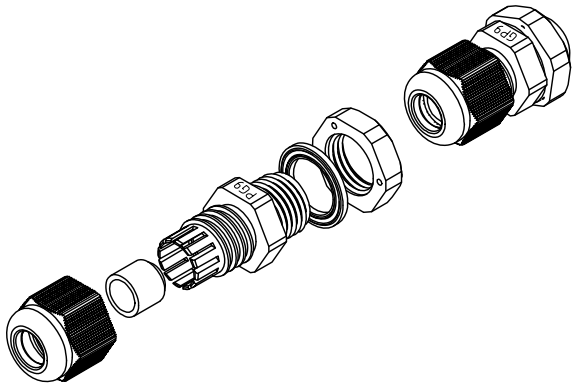

Material:Nylon PA6 ,UL 94 V-2
Characteristics:IP68
Color:Gray

Order Information:

L-KLS8-0607-PG-XX-G

L: RoHS
0607: Nylon Cable Glands
Serial number
Cable Outlet: PG-XX Item No.
Color Code:G-Gray

ANGLE TOLERANCE	PROJECTION		Description:	
±3°			Waterproof Joint	
GENERAL TOLERANCE	UNITS	mm	KLS P/N:	L-KLS8-0607-PG-XX-G
x.x ±0.30	SHEET SIZE	A4		
x.xx ±0.20	Draw:	Jenny	2024-04-17	NingBo KLS ELECTRONIC CO.,LTD.
x.xxx ±0.10	Check:	Daniel	2024-04-17	