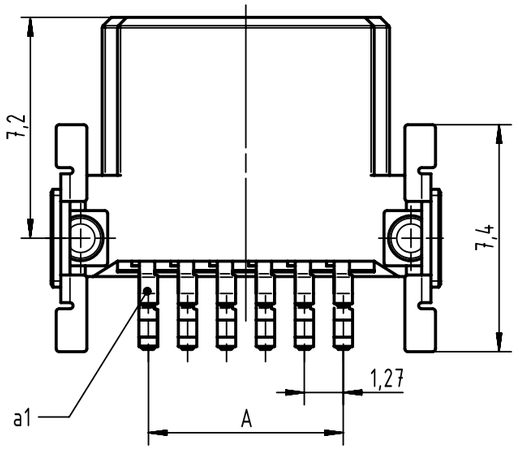

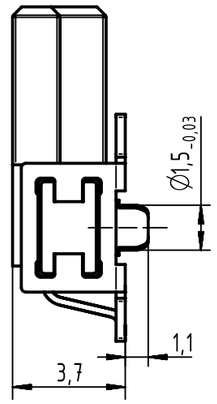

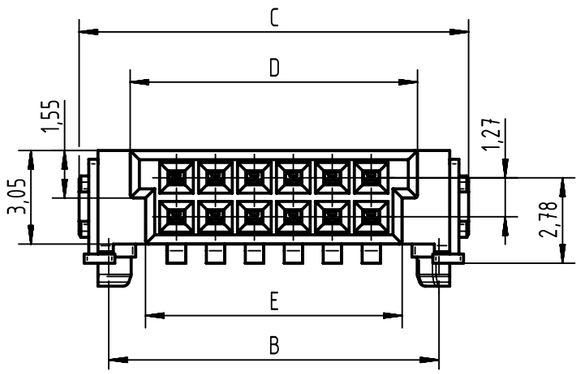

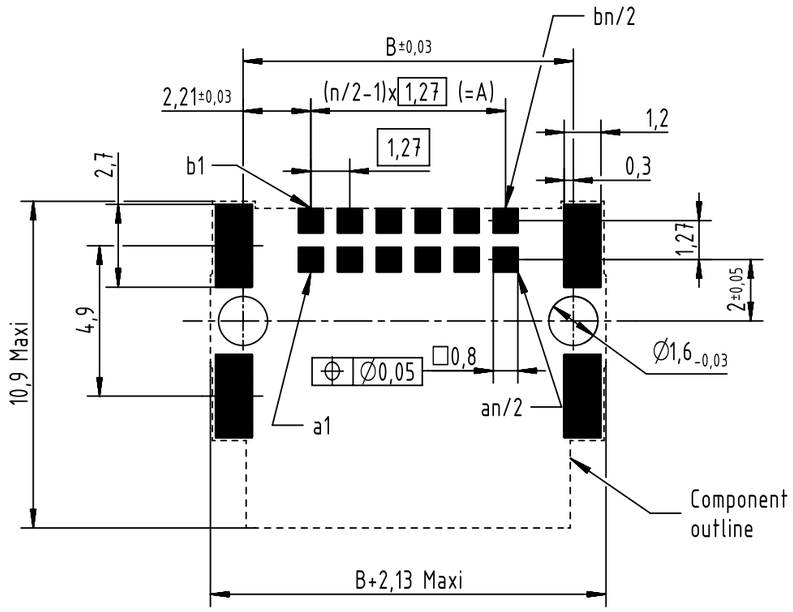

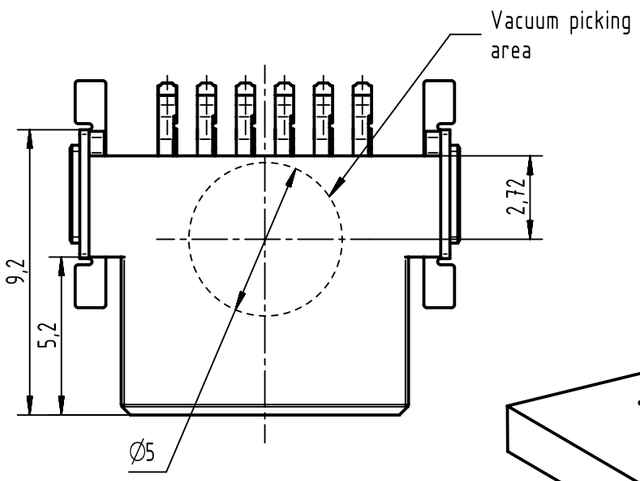

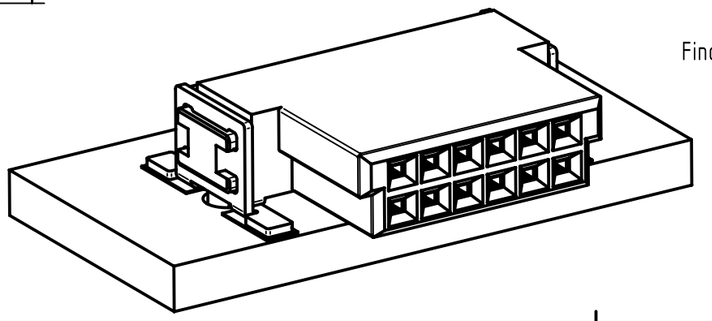

N° of contacts	Part number	A	B	C	D	E
006	15 25 006 x601 xxx	2,54	6,96	8,89	5,56	4,56
008	15 25 008 x601 xxx	3,81	8,23	10,16	6,83	5,83
010	15 25 010 x601 xxx	5,08	9,50	11,43	8,10	7,10
012	15 25 012 x601 xxx	6,35	10,77	12,70	9,37	8,37
014	15 25 014 x601 xxx	7,62	12,04	13,97	10,64	9,64
016	15 25 016 x601 xxx	8,89	13,31	15,24	11,91	10,91
018	15 25 018 x601 xxx	10,16	14,58	16,51	13,18	12,18
020	15 25 020 x601 xxx	11,43	15,85	17,78	14,45	13,45
022	15 25 022 x601 xxx	12,70	17,12	19,05	15,72	14,72
024	15 25 024 x601 xxx	13,97	18,39	20,32	16,99	15,99
026	15 25 026 x601 xxx	15,24	19,66	21,59	18,26	17,26
028	15 25 028 x601 xxx	16,51	20,93	22,86	19,53	18,53
030	15 25 030 x601 xxx	17,78	22,20	24,13	20,80	19,80
032	15 25 032 x601 xxx	19,05	23,47	25,40	22,07	21,07
034	15 25 034 x601 xxx	20,32	24,74	26,67	23,34	22,34
036	15 25 036 x601 xxx	21,59	26,01	27,94	24,61	23,61
038	15 25 038 x601 xxx	22,86	27,28	29,21	25,88	24,88
040	15 25 040 x601 xxx	24,13	28,55	30,48	27,15	26,15
042	15 25 042 x601 xxx	25,40	29,82	31,75	28,42	27,42
044	15 25 044 x601 xxx	26,67	31,09	33,02	29,69	28,69
046	15 25 046 x601 xxx	27,94	32,36	34,29	30,96	29,69
048	15 25 048 x601 xxx	29,21	33,63	35,56	32,23	31,23
050	15 25 050 x601 xxx	30,48	34,90	36,83	33,50	32,50
052	15 25 052 x601 xxx	31,75	36,17	38,10	34,77	33,77
054	15 25 054 x601 xxx	33,02	37,44	39,37	36,04	35,04
056	15 25 056 x601 xxx	34,29	38,71	40,64	37,31	36,31
058	15 25 058 x601 xxx	35,56	39,98	41,91	38,58	37,58
060	15 25 060 x601 xxx	36,83	41,25	43,18	39,85	38,85
062	15 25 062 x601 xxx	38,10	42,52	44,45	41,12	40,12
064	15 25 064 x601 xxx	39,37	43,79	45,72	42,39	41,39
066	15 25 066 x601 xxx	40,64	45,06	46,99	43,66	42,66
068	15 25 068 x601 xxx	41,91	46,33	48,26	44,93	43,93
070	15 25 070 x601 xxx	43,18	47,60	49,53	46,20	45,20
072	15 25 072 x601 xxx	44,45	48,87	50,80	47,47	46,47
074	15 25 074 x601 xxx	45,72	50,14	52,07	48,74	47,74
076	15 25 076 x601 xxx	46,99	51,41	53,34	50,01	49,01
078	15 25 078 x601 xxx	48,26	52,68	54,61	51,28	50,28
080	15 25 080 x601 xxx	49,53	53,95	55,88	52,55	51,55
082	15 25 082 x601 xxx	50,80	55,22	57,15	53,82	52,82
084	15 25 084 x601 xxx	52,07	56,49	58,42	55,09	54,09
086	15 25 086 x601 xxx	53,34	57,76	59,69	56,36	55,36
088	15 25 088 x601 xxx	54,61	59,03	60,96	57,63	56,63
090	15 25 090 x601 xxx	55,88	60,30	62,23	58,90	57,90
092	15 25 092 x601 xxx	57,15	61,57	63,50	60,17	59,17
094	15 25 094 x601 xxx	58,42	62,84	64,77	61,44	60,44
096	15 25 096 x601 xxx	59,69	64,11	66,04	62,71	61,71
098	15 25 098 x601 xxx	60,96	65,38	67,31	63,98	62,98
100	15 25 100 x601 xxx	62,23	66,65	68,58	65,25	64,25

Packaging	
tape & reel with 560 pcs per reel	000
samples	999

Performance level	
PL1: >500 mating cycles	2
PL2: >250 mating cycles	6
PLS4: min. 0,06µm Au over 0,7+0,2µm PdNi	5

Find further technical information on the drawing DS 15152200301

All Dimensions in mm
Original Size DIN A3

Scale 5:1

Free size tol.

Ref.

Sub.

All rights reserved

Department EC PD - CN

HARTING Electronics GmbH
D-32339 Espelkamp

Created by	Inspected by	Standardisation	Date	State
ZHUANGJ	LUOK	HOFFMANN	2018-03-06	Final Release

Title: har-flex angled female connector

Doc-Key / ECM-Nr.: 100529263/UGD/001/C 500000132044

Type: TB

Number: 1525XXXX601_XXX

Rev.: C

Page: 1/1

A3

Downloaded from Arrow.com.